PREMIER

ASSA ABLOY

Steel Door & Frame

Specifiers Catalog

OMNI STEEL DOORS

PREMIER
ASSA ABLOY

GALVANIZED DOORS: Many steel doors are used for exterior applications. Exterior doors receive unusually rough treatment and are subject to scratching, marring and therefore, rusting when the metal is not properly protected. Zinc coating on hot dipped galvanized steel will protect the exposed steel over a considerable area of bare surface when the paint covering is removed. Cold rolled steel and wipe coat galvanized steel will not. Hot dip galvanizing also protects the door from rust from the inside-out. Hot dip galvanized doors are available at no additional cost. All doors manufactured by Premier have hot dipped galvanized faces at no additional cost. Specifications for all steel doors should state "HOT DIPPED GALVANIZED STEEL FACES" and prime painting.

PREMIER DOOR SPECIFICATION

SECTION 08100 - METAL DOORS

1.0 GENERAL

1.1 **Scope:** This specification applies to standard steel doors as shown on the plans and door schedules and are to be Omni doors as manufactured by Premier Products, Inc., Monroe, Louisiana.

1.2 **Quality Assurance:** Provide doors in compliance with Federal Specification RR-D-575 C, ANSI A224.1, ANSI A151.1, ANSI A250.8, and ANSI/NAAMM HMMA 867. Provide fire doors listed by Underwriters Laboratories or Warnock Hersey International. Provide level and model in ANSI A250.8 as listed herein.

2.0 PRODUCTS

2.1 **Construction:** Provide doors of 1¾" (44) thick full flush construction with tight hemmed vertical interlocking seams on both square edges. Provide doors complying to SDI level and model number (select from chart).

2.2 **Steel:** Provide doors with skins fabricated from (20, 18 or 16 -select one) gage hot dipped galvanized steel, mill treated for proper paint adherence complying with ASTM A653.

2.3 **Top and Bottom Channels:** Provide top and bottom channel of 16 gage steel projection welded to door skins on 2" (51) centers. Top channel is to be flush, bottom channel inverted.

2.4 **Hinge Preparation:** Provide doors with 9 gage steel hinge reinforcements projection welded to the door skins in six places each. Hinge preparation is to be cut through the door and provided with reversible hinge filler plates to allow building site handing. Standard hinge preparation is to be for 4½" (114) regular weight .134" (3) hinge, conforming to ANSI A156.7, three preparations through 7' 2" (2184) height and four over 7' 2" (2184) to 9' 0" (2743) height.

2.5 **Lock Preparation:** Provide doors with 14 gage steel formed lock reinforcements with extruded tapped holes projection welded to the door skins in six places. Provide SDI recommended internal reinforcements to support door skins during hardware installation. Standard lock preparation is to be for cylindrical 2¾" (70) backset ANSI A115.2 Series 4000 (Gov't 161) or for mortise 2¾" (70) backset ANSI A115.1 Series 1000 (Gov't 86).

2.6 **Core Construction:** (Select core(s) of choice)

2.6.1 **Honeycomb:** Provide doors with 99# test honeycomb cell core, crush strength of 55 psi. Impregnate core with water resistant resin. Core is to be secured to face skins with adhesive. Honeycomb core doors shall meet the following performance standards- 'U' FACTOR = .42c - 'R' FACTOR = 2.38c - STC RATING = 31c. **FIRE PROTECTION to 3 hours.** Premier Series 'H'.

2.6.2 **Polystyrene:** Provide doors with pre-foamed polystyrene slab of 1.0# test density filling the inside of the door. Core is to be secured to face skins with adhesive. Polystyrene core doors shall meet the following performance standards: 'U' FACTOR =.153c - 'R' FACTOR = 6.54c - STC RATING = 25c. **FIRE PROTECTION to 3 hours.** Premier Series 'S'.

2.6.3 **Polyurethane:** Provide doors with a closed cell, waterproof foamed-in-place urethane core completely filling the inside of the door. Polyurethane core doors shall meet the following performance standards: 'U' FACTOR = .079c - 'R' FACTOR =12.64c - STC RATING = 26c - **FIRE PROTECTION to 1½ hours.** Premier series 'P'.

2.6.4 **Polyurethane Steel Stiffened:** Provide doors with 20 gage vertical steel "Z" stiffeners welded to face skins at 6" (152) centers and foamed-in-place closed cell, waterproof urethane core completely filling the inside of the door. Polyurethane steel stiffened doors shall meet the following standards- 'U' FACTOR - .079c - 'R' FACTOR = 12.64c - STC RATING = 26c - **FIRE PROTECTION TO 1½ hours.** Premier Series 'PS'.

2.6.5 **Mineral:** Provide fire doors requiring maximum 250 degree fahrenheit temperature rise with mineral composite fire door core to resist heat transfer through the door to the rated temperature for 30 minutes. Mineral core doors shall meet the following performance standards: **FIRE PROTECTION to 3 hours - TEMPERATURE RISE IN 30 MINUTES to maximum 250 degrees fahrenheit.** Premier Series 'M'.

2.7 **Reversibility:** Provide doors engineered to be reversible for swing at the building site.

2.8 **Closer and other Reinforcement:** Provide all 18 and 16 gage doors with a 14 gage box type closer reinforcement attached to the top channel. Provide identical closer reinforcement on all 20 gage doors scheduled to receive a surface applied door closer. Provide other door reinforcing as necessary to support the hardware scheduled in accordance with ANSI A250.6.

2.9 **Painting:** Provide doors chemically treated for proper paint adherence and prime painted at the factory. Finish paint to be applied at the building site by the contractor.

2.10 **Fire Protection:** **Provide doors with fire ratings in accordance with the door schedule from Underwriters Laboratories or Warnock Hersey International.**

2.11 **Glass Glazing and Louvers:** Where required by the plans, doors are to be provided prepared for installation of glass and/or louvers. Door suppliers shall provide the cutouts, steel glazing frames and steel framed louvers. Glass, installation and finish painting shall be by the contractor.

3.0 EXECUTION

3.1 **Installation:** Contractor to provide installation of the doors plumb, square and in true alignment. Adjust doors to required clearances and tolerances, complying with NFPA 80, section 2-5.4 for fire doors.

Metric Conversion: Millimeters -shown in parenthesis after dimensions- are "soft conversion" calculations.

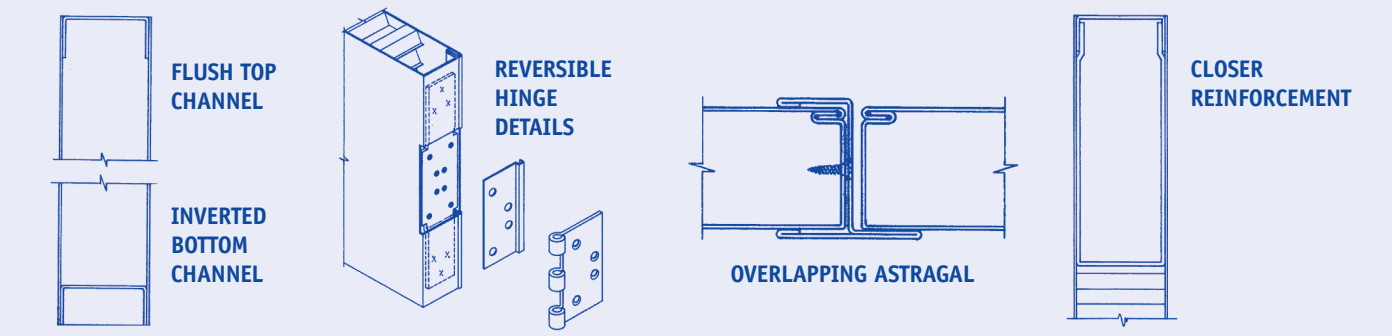

STANDARD DOOR SIZES

DOOR SIZE	20 GAGE	18 GAGE	16 GAGE
2068 (610) (2032)	•	•	•
2468 (711) (2032)	•	•	•
2668 (762) (2032)	•	•	•
2868 (813) (2032)	•	•	•
3068 (914) (2032)	•	•	•
3468 (1016) (2032)	•	•	•
3668 (1067) (2032)	•	•	•
3868 (1118) (2032)	•	•	•
4068 (1219) (2032)	•	•	•
2070 (610) (2134)	•	•	•
2470 (711) (2134)	•	•	•
2670 (762) (2134)	•	•	•
2870 (813) (2134)	•	•	•
3070 (914) (2134)	•	•	•
3470 (1016) (2134)	•	•	•
3670 (1067) (2134)	•	•	•
3870 (1118) (2134)	•	•	•
4070 (1219) (2134)	•	•	•
2072 (610) (2184)		•	•
2472 (711) (2184)		•	•
2672 (762) (2184)		•	•
2872 (813) (2184)		•	•
3072 (914) (2184)		•	•
3472 (1016) (2184)		•	•
3672 (1067) (2184)		•	•
3872 (1118) (2184)		•	•
4072 (1219) (2184)		•	•
3080 (914) (2438)		•	•
4080 (1219) (2438)		•	•
4090 (1219) (2743)		•	

NOTE: Above door sizes are also available in pairs. Other door sizes and designs available upon request. All core constructions may not be available in all sizes listed.

STANDARD DOOR FEATURES

POLYSTYRENE

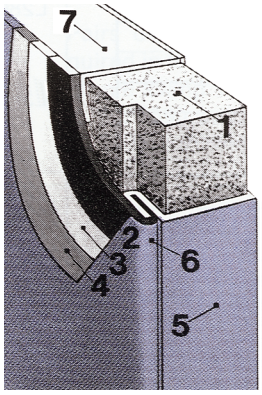

1. Core Material.
2. Hot Dipped Galvanized Steel face sheets.

HONEYCOMB

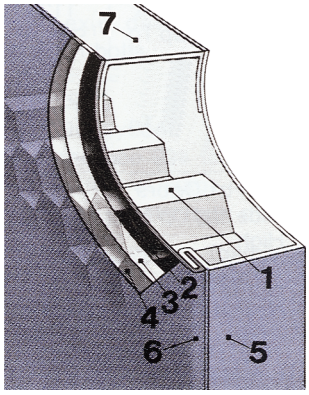

3. Zinc-Chromate wash primer.
4. Prime Paint.
5. Square Edges for complete reversibility.

POLYURETHANE

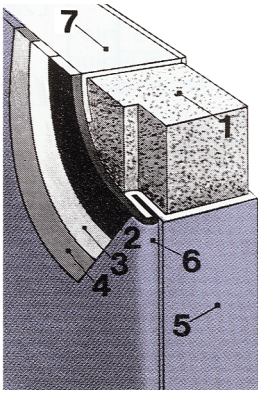

6. 4 Steel thickness on leading edge.
7. Flush Top channel.

ANSI A250.8/ SDI CLASSIFICATION

LEVEL		MODEL	CONSTRUCTION	PREMIER SERIES
I	Physical Performance Level C [1¾" (44) and 1⅜" (35)] Standard Duty Minimum gage = 20	1 2	Full Flush Seamless	H, P, S, PS H, P, S, PS
II	Physical Performance Level B [1¾" (44) only] Heavy Duty Minimum gage = 18	1 2	Full Flush Seamless	H, P, M, S, PS H, P, M, S, PS
III	Physical Performance Level A [1¾" (44) only] Extra Heavy Duty Minimum gage = 16	1 2	Full Flush Seamless	H, P, M, S, PS H, P, M, S, PS

NOTE: 16 gage doors are manufactured with a 1/8" (3) in 2" (51) beveled edge.

PREMIER FRAME SPECIFICATION

SECTION 08100 - METAL FRAMES

1.0 GENERAL

1.1 **Scope:** This specification applies to standard steel frames as shown on the plans and frame schedules and are to be frames as manufactured by Premier Products, Inc., Monroe, Louisiana.

1.2 **Quality Assurance:** Provide frames in compliance with ANSI A250.8 and ANSI/NAAMM HMMA 867 requirements. Provide fire frames listed by Underwriters Laboratories or Warnock Hersey International.

2.0 PRODUCTS

2.1 **Steel:** Provide frames fabricated from commercial quality steel complying with ASTM A1008 (uncoated) or ASTM A653 (hot dipped galvanized).

2.1.1 **Commercial Frame Construction:** Provide commercial frames for 1¾" (44) [or 1⅜" (35)] doors fabricated from 16 [or 14] gage commercial quality steel. All bends shall be formed with a true, sharp radii. Frame design shall have single return and double rabbet. Provide welded-in base anchor for attachment to floor.

2.1.2 **Drywall Frame Construction:** Provide all drywall frames for 1¾" (44) [or 1⅜" (35)] doors fabricated from 16 gage commercial quality steel. All bends shall be formed from a true, sharp radii. Frame design shall have a double rabbet and double return for installation over a finished wall. Frame shall be provided with a compression lug near the top of each jamb for secure pressure attachment to the wall. Base anchorage shall be by screws thru holes provided in face of frame at base (or by screws thru concealed base clips).

2.2 **Commercial Frame Assembly:** Provide all interior frames knocked-down with steel corner tabs for field assembly. Provide all exterior frames assembled face welded and ground smooth (options-all KD; all face welded; specify other welding). All welded frames shall be provided with a removable shipping strut welded across the jambs at the base.

2.2.1 **Drywall Frame Assembly:** Provide all drywall frames knocked-down with steel corner tabs and compression lugs for field assembly over the finished wall.

2.3 **Hinge Preparation:** Provide frames with 9 gage steel hinge reinforcement projection welded to the frame. Frames through 7' 2" (2184) shall have minimum of three hinge preparations, over 7' 2" (2184) through 9' 0" (2743) shall have four. Standard hinge preparation shall be for template 4½" x 4½" (114 x 114) regular weight .134" (3) hinges, provide for others as required by hardware schedule and templates.

2.4 **Strike Preparation:** Provide frames with 14 gage steel (or equivalent threads in extruded steel) lock strike reinforcement projection welded to the frame. Standard preparation shall be for ANSI A115.1 or A115.2 universal strike, provide for others as required by hardware schedule and templates.

2.5 **Other Reinforcements:** Provide hardware preparations in accordance with requirements of the finish hardware schedule and templates. Reinforcing shall be in accordance with ANSI A250.8.

2.6 **Painting:** All frames shall be phosphatized, prime painted by dip process to insure heavy, complete coverage and oven baked. Frames shall be suitable for field finish painting.

2.7 **Fire Protection:** **Provide frames with fire ratings from Underwriters Laboratory or Warnock Hersey International in accordance with the frame schedule.**

2.8 **Architectural Entrances, Sidelites & Borrowed Lites:** Provide all architectural entrances, sidelites and borrowed lites fabricated from 16 (or 14) gage commercial quality steel. Construction, preparation and profiles to match commercial frames. All mullion sections to be closed. Prepare door openings for hardware. All joints and corners of the assembly shall be face welded and ground smooth. Provide steel channel glazing beads for all areas with glass. Field joints shall be permitted when the size of the total assembly exceeds shipping limitations.

3.0 EXECUTION

3.1 **Installation:** Contractor to provide installation of the frames plumb, square and in true alignment. Use wood installations spreader at base, strike and mid-top locations to insure constant and proper jamb opening for door.

Metric Conversion: Millimeters -shown in parenthesis after dimensions- are "soft conversion" calculations.

F SERIES COMMERCIAL FRAME DETAILS

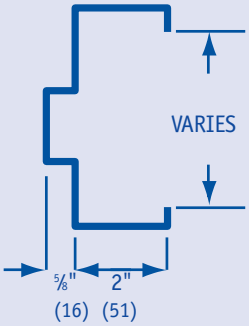

TYPICAL SECTION

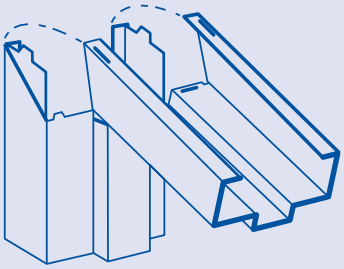

TYPICAL CORNER KD OR WELDED

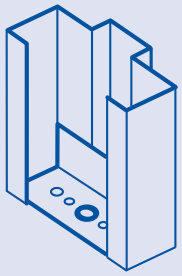

STANDARD BASE ANCHOR

SF SERIES ARCHITECTURAL ENTRANCE DETAILS

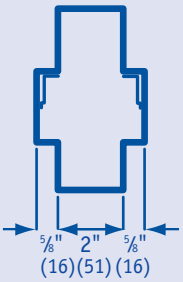

TYPICAL MULLION SECTION

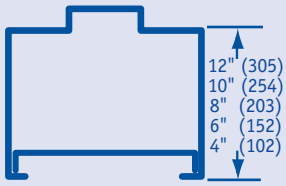

STANDARD SILL SECTION

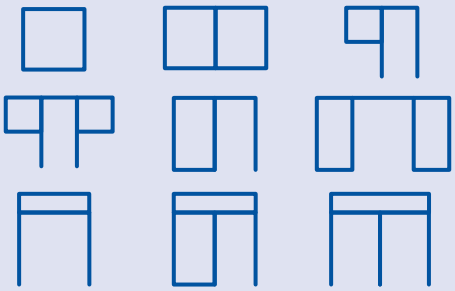

FE SERIES DRYWALL FRAME DETAILS

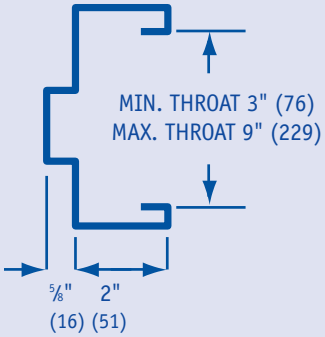

TYPICAL SECTION

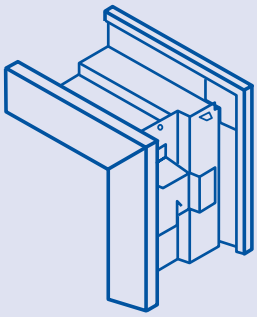

TYPICAL KD CORNER

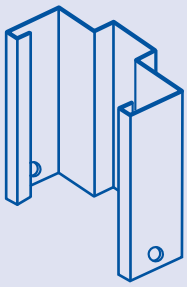

STANDARD BASE ANCHOR

ANCHOR OPTIONS

- Adjustable Wire Masonry Anchor
- Masonry "T" Anchor
- Adjustable Masonry Loop Anchor
- Existing Wall Anchor
- Pipe Sleeve Anchor
- Metal Stud "Z" Clip Anchor
- Wood Stud "Strap" Anchor
- Universal Wood Stud, Metal Stud or Existing Wall Anchor
- Drywall Frame Sill Clip Anchor

Metric Conversion: Millimeters -shown in parenthesis after dimensions- are "soft conversion" calculations.

Note to specifiers: Premier can provide many options to the prior listed standard specifications; such as special jamb depths, galvanized steel frames, special face dimensions, cut off stops, beveled doors, etc. Please contact our sales engineering department for assistance at 1-800-962-6517.

PREMIER
ASSA ABLOY

MONROE, LA

Administration/
Corporate Office
Ph: (318) 361-0796
TF: (800) 962-6517
Fx: (318) 323-5068

PO Box 7269
Monroe, LA 71211

ATLANTA, GA

Ph: (770) 944-1006
Fx: (770) 944-0963

6945 Oakridge Pkwy
Suite 207
Austell, GA 30168

HOUSTON, TX

Ph: (713) 690.0435
Fx: (713) 690.8241

8395 Kempwood Dr.
Houston, TX 77055

ORLANDO, FL

Ph: (800) 962.6517
Fx: (713) 690.8241

410 Santa Rosa Court
Oviedo, FL 32765

TrustPremier.com